GREENHECK
Building Value in Air.

Document 472058
Model SQ Direct Drive
Model BSQ Belt Drive
Centrifugal Inline Fans

Installation, Operation and Maintenance Manual

Please read and save these instructions for future reference. Read carefully before attempting to assemble, install, operate or maintain the product described. Protect yourself and others by observing all safety information. Failure to comply with these instructions will result in voiding of the product warranty and may result in personal injury and/or property damage.

Square Centrifugal Inline Fans

Fans include both direct- and belt-driven options with backward-inclined wheels and feature rugged construction, high-efficiency and low sound levels. These compact inline fans are the ideal selection for indoor clean air applications including intake, exhaust, return, or make-up air systems. The square housing design, compact size, and straight-thru airflow also provide the system designer the flexibility to mount in horizontal and vertical orientations. Each fan displays a permanently stamped metal nameplate with complete model number, mark, and unique serial number for future identification.

General Safety Information

Only qualified personnel should install this fan. Personnel should have a clear understanding of these instructions and should be aware of general safety precautions. Improper installation can result in electric shock, possible injury due to coming in contact with moving parts, as well as other potential hazards. Other considerations may be required if seismic activity is present. If more information is needed, contact a licensed professional engineer before moving forward.

1. Follow all local electrical and safety codes, as well as the National Electrical Code (NEC) and the National Fire Protection Agency (NFPA), where applicable. Follow the Canadian Electric Code (CEC) in Canada.
2. The rotation of the wheel is critical. It must be free to rotate without striking or rubbing any stationary objects.
3. Motor must be securely and adequately grounded.
4. Do not spin fan wheel faster than max cataloged fan RPM. Adjustments to fan speed significantly affects motor load. If the fan RPM is changed, the motor current should be checked to make sure it is not exceeding the motor nameplate amps.
5. Do not allow the power cable to kink or come in contact with oil, grease, hot surfaces or chemicals. Replace cord immediately if damaged.
6. Verify that the power source is compatible with the equipment.
7. Never open access doors to a duct while the fan is running.

DANGER
Always disconnect, lock and tag power source before installing or servicing. Failure to disconnect power source can result in fire, shock or serious injury.
CAUTION
When servicing the fan, motor may be hot enough to cause pain or injury. Allow motor to cool before servicing.
CAUTION
Precaution should be taken in explosive atmospheres.
DANGER
Pour écarter les risques d'incendie, de choc électrique ou de blessure grave, veiller à toujours débrancher, verrouiller et étiqueter la source de courant avant l'installation ou l'entretien.
ATTENTION
Lors de toute intervention sur la soufflante, le moteur peut être suffisamment chaud pour provoquer une douleur voire une blessure. Laisser le moteur refroidir avant toute maintenance.
ATTENTION
Faire preuve de précaution dans les atmosphères explosives.

Table of Contents

Receiving, Unpacking, Handling, Storage 2
Inspection and Maintenance During Storage 2
Removing from Storage 2
Dimensional Data
Direct Drive - Fan and Optional Filter. 3
Belt Drive - Fan and Optional Filter 4
Mounting - Horizontal or Base Mount 5
Mounting - Duct or Side Discharge 6
Isolator Information 6
Pre Start-Up Checks 7-8
Operation. 8
Inspection 8
Troubleshooting. 8
Maintenance 9
Tapered Bushing Hub Installation & Removal . .9-10
Recommended Bearing Lubrication. 10
Maintenance Log. 11
Parts List and Our Commitment 12

Receiving

Upon receiving the product check to ensure all items are accounted for by referencing the delivery receipt or packing list. Inspect each crate or carton for shipping damage before accepting delivery. Alert the carrier of any damage detected. The customer will make a notation of damage (or shortage of items) on the delivery receipt and all copies of the bill of lading which is countersigned by the delivering carrier. If damaged, immediately contact your local representative. Any physical damage to the unit after acceptance is not the responsibility of the manufacturer.

Unpacking

Verify that all required parts and the correct quantity of each item have been received. If any items are missing, report shortages to your local representative to arrange for obtaining missing parts. Sometimes it is not possible that all items for the unit be shipped together due to availability of transportation and truck space. Confirmation of shipment(s) must be limited to only items on the bill of lading.

Handling

Move fan to desired location and determine position of access panels, discharge and motor. Make sure the inlet and outlet have at least 2½ times the wheel diameter (duct diameter) before any obstructions like an elbow or transition. Attach the fan to a suitable framework as specified; hanging or base vibration isolators are recommended. See corresponding Fan Dimensions tables; pages 3 and 4 for physical dimensions. Mounting dimensions and vibration isolator centerline information is provided on pages 5 and 6. The motor's amperage and voltage ratings must be checked for compatibility to supply voltage prior to final electrical connection. Electrical lead-in wires are then connected to the factory supplied safety disconnect switch. All wiring must conform to local and national codes.

Storage

Fans are protected against damage during shipment. If the unit cannot be installed and operated immediately, precautions need to be taken to prevent deterioration of the unit during storage. The user assumes responsibility of the fan and accessories while in storage. The manufacturer will not be responsible for damage during storage. These suggestions are provided solely as a convenience to the user.

Indoor Storage: The ideal environment for the storage of fans and accessories is indoors, above grade, in a low humidity atmosphere which is sealed to prevent the entry of blowing dust, rain or snow. Temperatures should be evenly maintained between 30° to 110°F *(-1° to 43°C)* (wide temperature swings may cause condensation and "sweating" of metal parts). All accessories must be stored indoors in a clean, dry atmosphere.

Remove any accumulations of dirt, water, ice or snow and wipe dry before moving to indoor storage. To avoid "sweating" of metal parts allow cold parts to reach room temperature. To dry parts and packages, use a portable electric heater to get rid of any moisture buildup. Leave coverings loose to permit air circulation and to allow for periodic inspection.

The unit should be stored at least 3½ inches *(89 mm)* off the floor on wooden blocks covered with moisture proof paper or polyethylene sheathing. Aisles between parts and along all walls should be provided to permit air circulation and space for inspection.

Inspection and Maintenance During Storage

While in storage, inspect fans once per month. Keep a record of inspection and maintenance performed.

If moisture or dirt accumulations are found on parts, the source should be located and eliminated. At each inspection, rotate the wheel by hand ten to fifteen revolutions to distribute lubricant on motor. If paint deterioration begins, consideration should be given to touch-up or repainting. Fans with special coatings may require special techniques for touch-up or repair.

Machined parts coated with rust preventive should be restored to good condition promptly if signs of rust occur. Immediately remove the original rust preventive coating with petroleum solvent and clean with lint-free cloths. Polish any remaining rust from surface with crocus cloth or fine emery paper and oil. Do not destroy the continuity of the surfaces. Thoroughly wipe clean with Tectyl® 506 (Ashland Inc.) or the equivalent. For hard to reach internal surfaces or for occasional use, consider using Tectyl® 511M Rust Preventive, WD-40® or the equivalent.

Removing From Storage

As fans are removed from storage to be installed in their final location, they should be protected and maintained in a similar fashion until the fan equipment goes into operation.

Dimensional Data

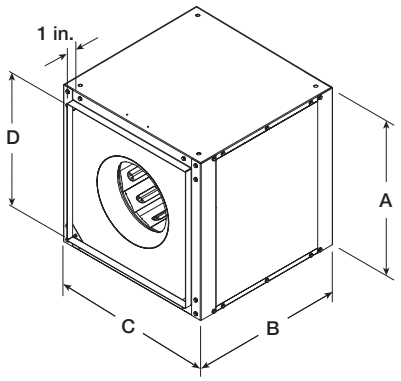

Figure 1: Direct Drive Fan Dimensions

Direct Drive Fan Dimensions						
Size	A	B	C	D	Damper	Weight^
60, 70	12	13	12	8-7/8	9	26
80, 90, 95	15	16	15	11-7/8	12	41
97, 98, 99	15	21	15	11-7/8	12	49
100	17	21	17	13-7/8	14	56
120	19	21	19	15-7/8	16	67
130 (HP)	21	21	21	17-7/8	18	67
140 (HP)	23	22	23	19-7/8	20	104
160 (HP)	26	26	26	22-7/8	23	160

All dimensions in inches and weight is shown in pounds.
^Weight shown is standard galvanized construction and largest cataloged open drip proof motor.

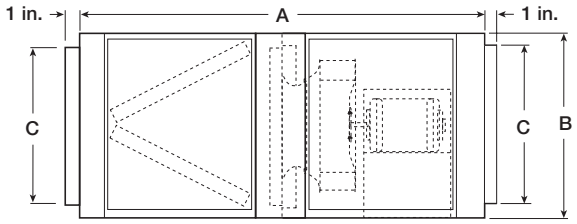

Figure 2: Direct Drive Filter Option Dimensions

Direct Drive Filter Option Dimensions						
Size	A	B	C	Weight^	Filter Size	Filter Quantity
60, 70	22-1/8	12	8-7/8	40	10 x 12	1
80, 90, 95	45-5/8	15	11-7/8	74	14 x 25	1
97, 98, 99	50-5/8	15	11-7/8	80	14 x 25	1
100	47-1/4	17	13-7/8	88	16 x 20	2
120	52-3/16	19	15-7/8	114	16 x 25	2
130 (HP)	46-3/8	21	17-7/8	120	20 x 20	2
140 (HP)	52-3/8	23	19-7/8	174	20 x 25	2
160 (HP)	51-3/8	26	22-7/8	246	20 x 20	4

All dimensions in inches and weight is shown in pounds.
^Weight shown is standard galvanized construction and largest cataloged open drip proof motor.
Note: 24 inch side clearance is recommended for accessing and removing filters.

Belt Drive Fan Dimensions									
Size	A	B	C	D	*E	*F	*G	Damper	Weight^
70, 80, 90	17-1/8	21	17-1/8	11-7/8	17-3/4	13	13-1/4	12	106
100	17-1/8	21	17-1/8	13-7/8	17-3/4	13	13-1/4	14	107
120	19-1/8	21	19-1/8	15-7/8	20	17	13-1/4	16	124
130 (HP)	21-1/8	21	21-1/8	17-7/8	20	17	13-1/4	18	131
140 (HP)	23-1/8	22	23-1/8	19-7/8	20	17	13-1/4	20	146
160 (HP)	26-1/8	26	26-1/8	22-7/8	20	17	13-1/4	23	188
180 (HP)	27-1/8	28	27-1/8	23-7/8	20	17	13-1/4	24	195
200 (HP)	31-1/8	32	31-1/8	27-7/8	30	20	16	28	246
240 (HP)	38-1/8	34	38-1/8	34-7/8	30	20	16	35	350
300 (HP)	46	38	46	41-7/8	34	22	18	42	537
360 (HP)	52	42	52	47-7/8	34	22	18	48	686
420	58	50	58	53-7/8	34	22	18	54	789

All dimensions in inches and weight is shown in pounds.
*Motor cover is optional. Size may be greater depending on motor.
^Weight shown is standard galvanized construction and largest cataloged open drip proof motor.

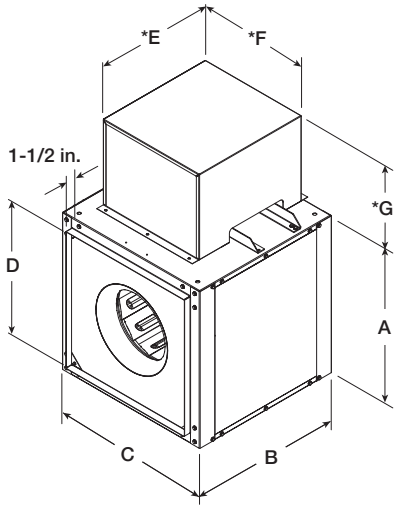

Figure 3: Belt Drive Fan Dimensions

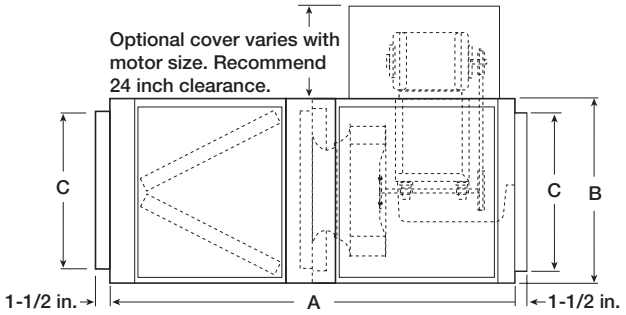

Figure 4: Belt Drive Filter Option Dimensions

Belt Drive Filter Option Dimensions						
Size	A	B	C	Weight^	Filter Size	Filter Quantity
70, 80, 90	53-7/8	17-1/8	11-7/8	168	16 x 20	2
100	53-7/8	17-1/8	13-7/8	169	16 x 20	2
120	58-3/4	19-1/8	15-7/8	194	16 x 25	2
130 (HP)	53-1/4	21-1/8	17-7/8	197	20 x 20	2
140 (HP)	59	23-1/8	19-7/8	231	20 x 25	2
160 (HP)	58-3/4	26-1/8	22-7/8	285	20 x 20	4
180 (HP)	60-3/4	27-1/8	23-7/8	293	20 x 25	4
200 (HP)	69-3/8	31-1/8	27-7/8	361	12 x 25	3
					16 x 25	3
240 (HP)	71-1/2	38-1/8	34-7/8	496	20 x 25	4
					16 x 25	4
300 (HP)	72-1/8	46	41-7/8	759	20 x 25	8
360 (HP)	79-1/4	52	47-7/8	957	16 x 25	10
					20 x 25	5
420	93-1/8	58	53-7/8	1185	16 x 25	5
					20 x 25	10

All dimensions in inches and weight is shown in pounds.
^Weight shown is standard galvanized construction and largest cataloged open drip proof motor.
Note: 24 inch side clearance is recommended for accessing and removing filters.

Mounting

NOTE

Flex duct is recommended for mounting to the inlet of the fan to allow for fitting adjustments. If the inlet venturi requires adjustment, it can be detached from the unit via the fasteners located on the inlet panel.

All fan models can be mounted horizontally, vertically or at an angle. For ease of installation, knockouts are provided at each location where mounting brackets are shown in Figures 5, 6 and 7. Optional brackets are universally adjustable to mount in any of these locations.

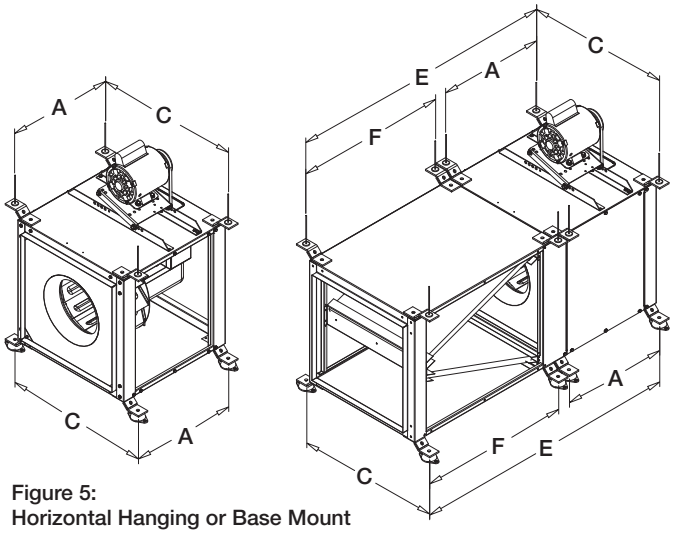

Figure 5:
Horizontal Hanging or Base Mount

With either a hanging or base mount the motor may be located on either side. The base mount allows top access panels only.

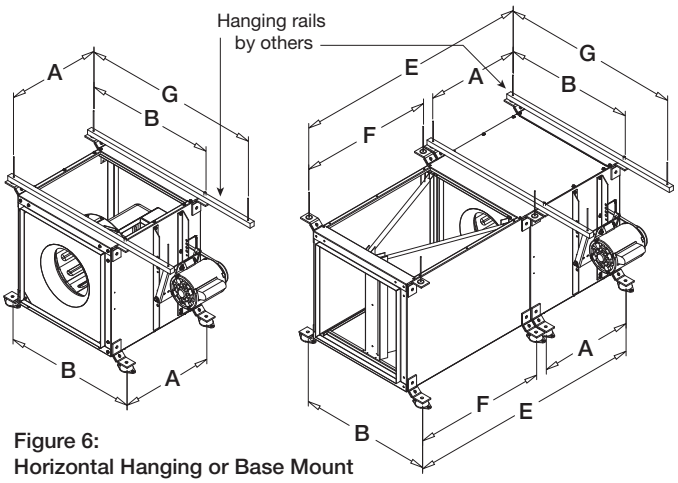

Figure 6:
Horizontal Hanging or Base Mount

With a hanging mount, the motor may be located on either top or bottom. The base mount allows top motor location only. Both options provide access panels on two sides.

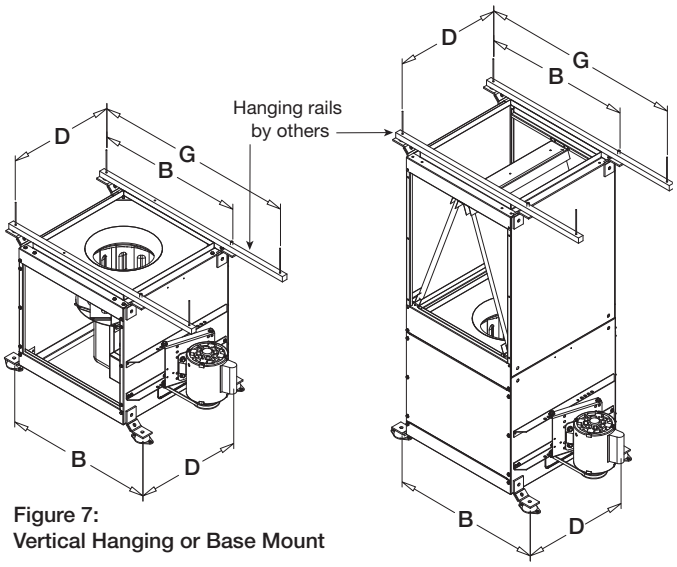

Figure 7:
Vertical Hanging or Base Mount

Mounting brackets are turned 90° for vertical mounting. Access panels are located on the two sides adjacent to the motor.

Direct Drive Mounting Dimensional Data							
Size	A	B	C	D	E	F	G*
60, 70	10-5/8	16-3/4	14-5/8	8-7/8	19-7/8	6-7/8	See note
80, 90, 95	13-1/4	19-3/4	15-1/8	9-3/8	43	27-3/8	
97, 98, 99	18-5/8	19-3/4	15-1/8	9-3/8	48-3/8	27-3/8	
100	18-5/8	21-3/4	19-5/8	13-7/8	43-3/4	22-3/4	
120	18-5/8	23-3/4	21-5/8	15-7/8	49-1/8	28-1/8	
130 (HP)	18-5/8	25-3/4	23-5/8	17-7/8	44	23	
140 (HP)	19-5/8	27-3/4	25-5/8	19-7/8	50	28	
160 (HP)	23-1/2	31	28-3/4	22-7/8	49-1/2	23-5/8	
Belt Drive Mounting Dimensional Data							
70, 80, 90, 100	18	21-13/16	19-7/8	14-1/8	50-7/8	29-7/8	See note
120	18	23-13/16	21-7/8	16-1/8	55-3/4	34-3/4	
130 (HP)	18	25-13/16	23-7/8	18-1/8	50-1/4	29-1/4	
140 (HP)	19	27-13/16	25-7/8	20-1/8	56	34	
160 (HP)	23	31-3/16	29	23-1/8	55-3/4	29-3/4	
180 (HP)	25	32-3/16	30	24-1/8	57-3/4	29-3/4	
200 (HP)	29	36-3/16	34	28-1/8	66-3/8	34-3/8	
240 (HP)	31	43-3/16	41	35-1/8	68-1/2	34-1/2	
300 (HP)	35	51	46-3/4	40-7/8	69-1/8	31-3/8	
360 (HP)	39-3/8	57	52-5/8	46-3/4	76-5/8	34-3/4	
420	47	63	58-5/8	52-3/4	90-1/4	40-5/8	

All dimensions in inches.
*Hanging rails not included. Supplied by others.

Duct Length

The inlet and outlet duct length should be approximately two to three wheel diameters long before and after the fan to achieve cataloged performance.

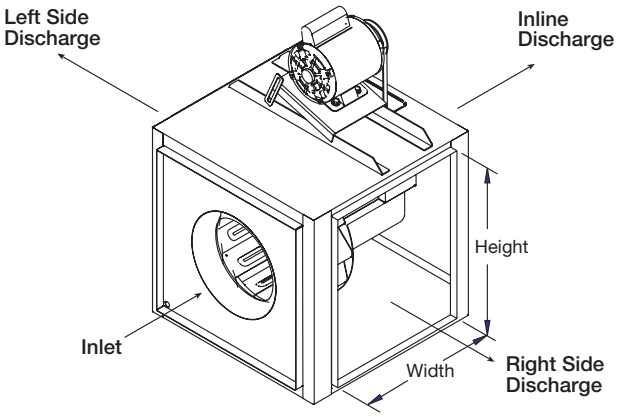

Figure 8

Side Discharge

Make sure discharge is oriented in the same direction as originally ordered, performance will change with different discharge positions. Refer to Figure 8 for proper side discharge definition and the Side Discharge chart for dimensions. Consult factory for performance corrections.

Direct Drive Side Discharge Duct Openings		
Size	Width	Height
60, 70	9-7/8	8-7/8
80, 90, 95	12-7/8	11-7/8
97, 98, 99	13-7/8	11-7/8
100	13-7/8	13-7/8
120	15-7/8	15-7/8
130 (HP)	17-7/8	17-7/8
140 (HP)	19-7/8	19-7/8
160 (HP)	22-7/8	22-7/8
Belt Drive Side Discharge Duct Openings		
70, 80, 90, 100	12-1/2	13-7/8
120	12-1/2	15-7/8
130 (HP)	12-1/2	17-7/8
140 (HP)	13-1/2	19-7/8
160 (HP)	17-1/2	22-7/8
180 (HP)	19-1/2	23-7/8
200 (HP)	23-1/2	27-7/8
240 (HP)	25-1/2	34-7/8
300 (HP)	31-7/8	41-7/8
360 (HP)	32-7/8	37-7/8
420	34-7/8	43-7/8

All dimensions in inches.

Hanging Spring Isolator

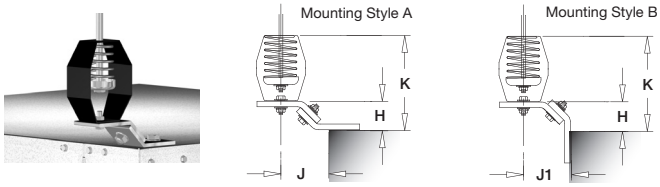

Hanging Neoprene Isolator

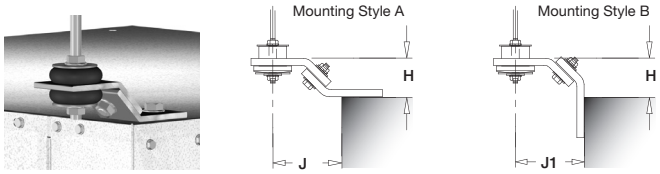

Standing Spring Isolator

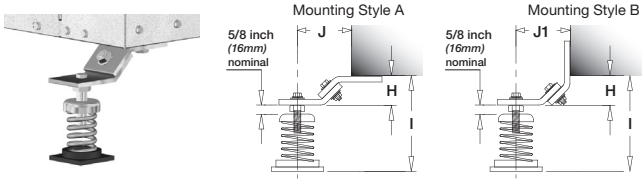

Standing Neoprene Isolator

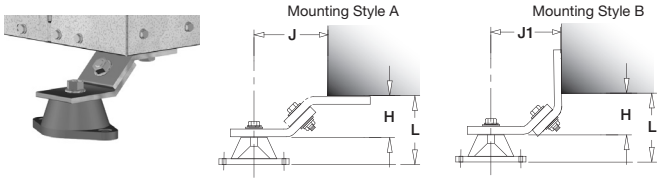

Direct Drive Isolator Dimensional Data						
Size	H	I	J	J1	K	L
60, 70, 80, 90, 95, 97, 98, 99, 100, 120, 130 (HP), 140 (HP)	1-3/8	5-1/2	1-3/8	2-3/8	6-3/4	2-5/16
160 (HP)	1-3/8	5-1/2	1-3/8	2-1/2	6-3/4	2-5/8
Belt Drive Isolator Dimensional Data						
70, 80, 90, 100, 120, 130 (HP), 140 (HP)	1-3/8	5-1/2	1-3/8	2-3/8	6-3/4	2-5/8
160 (HP), 180 (HP), 200 (HP), 240 (HP), 300 (HP), 360 (HP), 420	1-3/8	5-1/2	1-3/8	2-1/2	6-3/4	2-5/8

All dimensions in inches.

Replacement Isolator(s)						
Model		Fan Size				
Direct Drive Centrifugal		60-140	160	–	–	–
Belt Drive Centrifugal		70-140	160-200	240	300	360-420
Approx. Weight (lbs)		0-150	150-300	300-500	500-700	700-1200
Isolator Type		Isolator Part Number (Color)				
Spring	Hanging 1-inch	850343 (Blue)	850344 (Green)	850345 (Gray)	850346 (Brown)	
	Hanging 2-inch	855858 (Blue)	855859 (Green)	855860 (Gray)	855861 (Brown)	
	Base Mount	850347 (Blue)	850348 (Green)	850349 (Gray)	850350 (Brown)	
Neoprene	Hanging	855837 (Black)	855838 (Black)			N/A
	Base Mount	855834 (Green)			855835 (Black)	855836 (Red)

Pre Start-Up Checks

1. **Check all fasteners for tightness.** The wheel should rotate freely and be aligned as shown in Figure 9. Wheel position is preset and the unit is tested at the factory. Movement may occur during shipment, and realignment may be necessary. Centering can be accomplished by loosening the bolts holding the inlet (venturi) panel and repositioning. Wheel and inlet cone overlap can be adjusted by loosening the setscrews in the wheel and moving the wheel to the desired position.

Wheel Overlap Dimensions				
Size	Direct Drive	Belt Drive	G - Overlap	H - Gap
60-95	x		-	1/8
97-99	x		1/4	
100-160	x		1/4	-
70-160		x	1/4	-
180-240		x	3/8	-
300-420		x	1/2	-

All dimensions in inches.

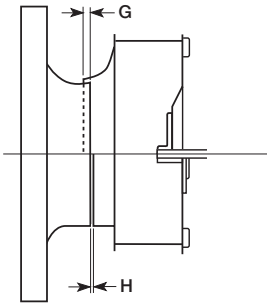

Figure 9

2. **Wheel Rotation:** Direction of wheel rotation is critical. Reversed rotation will result in poor air performance, motor overloading and possible burnout. Check wheel rotation by momentarily energizing the unit (all direct and belt drive fans have clockwise wheel rotation when viewed from top of fan). Rotation should be clockwise as shown in Figure 10 and correspond to the rotation decal on the unit. If wheel rotation is incorrect, reverse two of the wiring leads for 3 phase or check motor wiring for single phase. Fan rpm should be checked and verified with a tachometer.

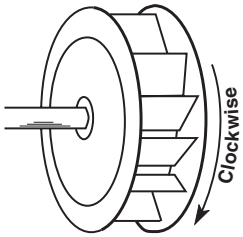

Figure 10

WARNING
Correct direction of wheel rotation is critical. Reversed rotation will result in poor air performance, motor overloading and possible burnout.
AVERTISSEMENT
La turbine doit impérativement tourner dans le bon sens. Une rotation en sens inverse entraînerait de mauvaises performances de soufflage, une surcharge du moteur voire un grillage du moteur.

3. **Vibration Isolators:** After fan is moved to desired location, punch out the four knockout holes which are located on the unit top and bottom panels. Assemble the brackets to the unit according to the appropriate drawings on page 6 and refer to respective parts list on page 11. Make certain all connectors are tight and that all washers are in.
4. **For Belt Drive Fans:** If adjustments are made, it is very important to check the pulleys for proper alignment. Misaligned pulleys lead to excessive belt wear, vibration, noise, and power loss; Figure 11.

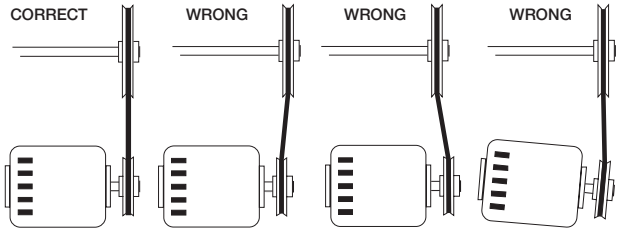

Figure 11

5. **For Belt Drive Fans:** Belt tension can be adjusted by loosening four fasteners marked "R" on the drive frame. (Refer to Figure 12). The motor plate slides on the slotted adjusting arms. Belt tension should be adjusted to allow 1/64 inch of deflection per inch of belt span. For example, a 15 inch belt span should have 15/64 inch (or about 1/4 inch) of deflection with moderate thumb pressure at mid-point between pulleys (see Figure 13). Over-tightening will cause excessive bearing wear and noise. Too little tension will cause slippage at start-up and uneven wear.

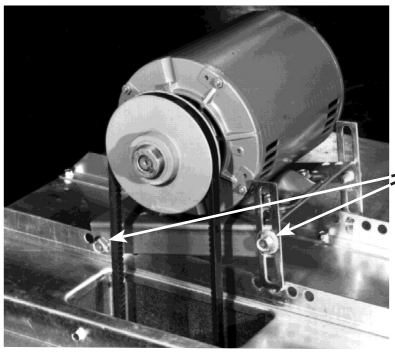

NOTE: Identical fasteners on opposing side must also be loosened.

Figure 12

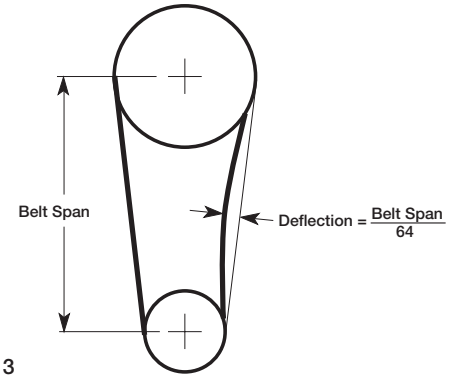

Figure 13

6. The adjustable motor pulley is factory set for the RPM specified. Speed can be increased by closing or decreased by opening the adjustable motor sheave. Two groove variable pitch pulleys must be adjusted an equal number of turns open or closed. Any increase in speed represents a substantial increase in the horsepower required by a unit. Motor amperage should always be checked to avoid serious damage to the motor when speed is varied.

IMPORTANT

The fan has been checked for mechanical noises at the factory prior to shipment. If mechanical noise should develop, suggested corrective actions are offered in the Troubleshooting section.

IMPORTANT

Over-tightening will cause excessive bearing wear and noise. Too little tension will cause slippage at start-up and uneven wear.

IMPORTANT

Adjust (tighten) belt tension after the first 24-48 hours of operation.

Operation

1. Before starting up or operating fan, check all fasteners for tightness. In particular, check the setscrews in wheel hub (and pulleys, if applicable).
2. While in the OFF position or before connecting the fan to power, turn the fan wheel by hand to be sure it is not striking the venturi or any obstacle.
3. Start the fan and shut it off immediately to check rotation of the wheel with directional arrow in the motor compartment, see Figure 10.
4. When the fan is started, observe the operation and check for any unusual noises.
5. With the system in full operation and all ductwork attached, measure current input to the motor and compare with the nameplate rating to determine if the motor is operating under safe load conditions.
6. Keep inlets and approaches to fan clean and free from obstruction.

Inspection

Inspection of the fan should be conducted at the first 30 minute and 24 hour intervals of satisfactory operation.

30 Minute Interval
Inspect bolts, setscrews and motor mounting bolts. Adjust and tighten as necessary.

24 Hour Interval
Check all internal components. On belt drive fans only, inspect belt alignment and tension. Adjust and tighten as necessary.

Troubleshooting

WARNING

Before taking any corrective action, make certain unit is not capable of operation during repairs.

AVERTISSEMENT

Avant d'entreprendre toute action corrective, s'assurer que l'appareil ne pourra pas fonctionner durant les réparations.

PROBLEM	CAUSE	CORRECTIVE ACTION
Excessive noise or vibration	Wheel unbalance	Clean all dirt off wheel. Check wheel balance, rebalance in place if necessary.
	Bad bearings	Replace.
	Belts too tight or too loose	Adjust tension, see Figure 12.
	Wheel improperly aligned and rubbing	Center wheel on inlet, see Figure 9.
	Loose drive or motor pulleys	Align and tighten. See "Pre Start-Up Checks", on pages 7 and 8.
	Foreign objects in wheel or housing	Remove objects, check for damage or unbalance.
Reduced airflow	System resistance too high	Check system: Proper operation of backdraft or control dampers, obstruction in ductwork, clean dirty filters.
	Unit running backwards	Correct. See Wheel Rotation on page 7.
	Excessive dirt buildup on wheel	Clean wheel.
	Improper wheel alignment	Center wheel on inlet, see Pre Start-Up Checks and Figure 9.

Maintenance

Installation and maintenance are to be performed only by qualified personnel who are familiar with local codes and regulations and who are experienced with this type of equipment.

Motor maintenance is generally limited to cleaning and lubrication (where applicable). Cleaning should be limited to exterior surfaces only. Removing dust buildup on motor housing ensures proper motor cooling.

Greasing of motors is only intended when fittings are provided. Many fractional horsepower motors are permanently lubricated and should not be lubricated after installation. Motors supplied with grease fittings should be greased in accordance with manufacturers' recommendations. Where motor temperatures do not exceed 104ºF *(40ºC)*, the grease should be replaced after 2,000 hours of running time as a general rule.

Wheels require very little attention when moving clean air. Occasionally, oil and dust may accumulate causing imbalance. When this occurs the wheel and housing should be cleaned to ensure smooth and safe operation.

All fasteners should be checked for tightness each time maintenance checks are performed prior to restarting unit.

A proper maintenance program will help these units deliver years of dependable service.

DANGER
Always disconnect, lock and tag power source before servicing. Failure to disconnect power source can result in fire, shock or serious injury.
DANGER
Pour écarter les risques d'incendie, de choc électrique ou de blessure grave, veiller à toujours débrancher, verrouiller et étiqueter la source de courant avant l'installation ou l'entretien.
IMPORTANT
Uneven cleaning of the wheel will produce an out of balance condition that will cause vibration in the fan.
WARNING
This unit should be made non-functional when cleaning the wheel or housing (fuses removed, disconnect locked off).
AVERTISSEMENT
L'appareil doit être rendu non opérationnel lors du nettoyage de la turbine ou du caisson (fusibles retirés, sectionneur verrouillé).

Tapered Bushing Hub Installation and Removal

For wheel hubs and shaft pulleys utilizing a tapered bushing interface, follow this procedure for installation and removal. There are two possible set ups for the tapered bushing, both have the same procedure, but orientation of the hub varies.

Tapered Bushing Removal

1. If present, loosen the setscrew holding the bushing and shaft key in place.
2. Loosen and remove the socket head cap screws which fasten the bushing to the hub as shown in the section views and examples of Figures 14-17.

Standard Mounting	Reverse Mounting
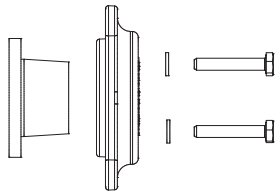 Figure 14	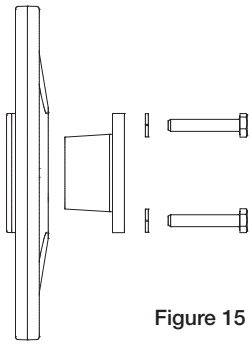 Figure 15
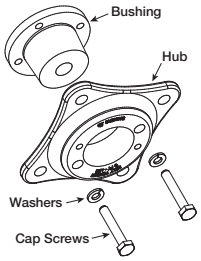	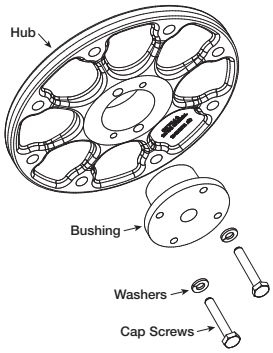
Figure 16 Standard Bushing Orientation	Figure 17 Reverse Bushing Orientation

3. **Standard Mounting:** Take the two socket head cap screws that were removed and install them into the visibly threaded holes on the wheel hub.
   Reverse Mounting: Install the two socket head cap screws into the visibly threaded holes of the bushing flange.
4. Once both socket head cap screws are installed, tighten them an eighth of a turn at a time, alternating between the two until the hub comes loose from the bushing.

Tapered Bushing Installation

1. Clean all surfaces of hub and bushing to remove any oil or residue present and do not use any lubricant to install bushing into the hub. For both standard and reverse mounting styles, the socket head cap screws are adjustable from the inlet of the fan.
2. **Standard Mounting:** Slide the bushing and shaft key onto the fan shaft followed by the wheel and hub assembly. If present, use the keyway setscrew to hold the shaft key and bushing in place but DO NOT overtighten as this can damage the bushing. Align the unthreaded holes of the hub with the threaded holes of the tapered bushing.
   Reverse Mounting: Slide the wheel and hub assembly onto the fans shaft followed by the bushing and shaft key. If present, use the keyway setscrew to hold the shaft key and bushing in place but DO NOT overtighten as this can damage the bushing. Align the unthreaded holes of the tapered bushing with the threaded holes of the hub.
3. Install the two bushing socket head cap screws into the aligned holes by hand (or without excessive torque) until the heads of the socket head cap screws are seated against the mating surface.
4. Adjust the height of the wheel in the fan relative to the inlet venturi then tighten the two socket head cap screws an eighth turn at a time in an alternating fashion and to a torque of 10 ft-lbs.

Belt/Bearing Maintenance - Belt Drive

1. Belts tend to stretch after a period of time. They should be checked periodically for wear and tightness. When replacing belts, use the same type as supplied with the unit.
2. Matched belts should always be used on units with multi-groove pulleys.
3. For belt replacement, loosen the tensioning device enough to allow removal of the belt by hand. Do not force belts on or off. This may cause cords to break, leading to premature belt failure.
4. Once installed, adjust belts as shown in Pre-Start-Up Checks.
5. Shaft bearings can be classified in two groups: relubricating and non-relubricating. All bearings on standard belt drive fans are factory lubricated and require no further lubrication under normal use (between -20ºF and 180ºF *(-29ºC and 82ºC)* in a relatively clean environment).
6. Units installed in hot, humid or dirty locations should be equipped with special bearings. These bearings will require frequent lubrication. Caution should be employed to prevent overpacking or contamination.
7. Grease fittings should be wiped clean. The unit should be in operation while lubricating. Extreme care should be used around moving parts.
8. Grease should be pumped in very slowly until a slight bead forms around the seal. A high grade lithium base grease should be used.

Recommended Relubrication Frequency in Months

NOTE: If unusual environment conditions exist (extreme temperature, moisture or contaminants) more frequent lubrication is required.

A good quality lithium base grease, conforming to NLGI Grade 2 consistency, such as those listed here may be used with fan bearings.

Suggested Fan Bearing Greasing Intervals

Interval (months)	Type of Service
1 to 3	Heavy duty in dirty, dusty locations; high ambient temperatures; moisture laden atmosphere; vibration.
3 to 6	12 to 24 hours per day, heavy duty, or if moisture is present
6 to 12	8 to 16 hours per day in clean, relatively dry atmosphere
12 to 18	Infrequent operation or light duty in clean atmosphere

Grease Manufacturers

Manufacturer	Grease (NLGI #2)
Chevron U.S.A. Inc	Chevron SRI Grease 2
	Chevron Multifak EP 2
Exxon Mobil	Mobilux EP 2
	Mobilith SHC 220
	Mobilith AW-2
	Unirex N2
BP Amoco	Rykon Premium #2 EP
Shell	Shell Gadus S2 V220 2

Maintenance Log

Date _____ Time _____ AM/PM
Notes: _____

Date _____ Time _____ AM/PM
Notes: _____

Date _____ Time _____ AM/PM
Notes: _____

Date _____ Time _____ AM/PM
Notes: _____

Date _____ Time _____ AM/PM
Notes: _____

Date _____ Time _____ AM/PM
Notes: _____

Date _____ Time _____ AM/PM
Notes: _____

Date _____ Time _____ AM/PM
Notes: _____

Date _____ Time _____ AM/PM
Notes: _____

Date _____ Time _____ AM/PM
Notes: _____

Date _____ Time _____ AM/PM
Notes: _____

Date _____ Time _____ AM/PM
Notes: _____

Parts List

Each fan bears a manufacturer's nameplate with model number and serial number embossed. This information will assist the local representative and the factory in providing service and replacement parts. Before taking any corrective action, make certain unit is not capable of operation during repairs.

CAUTION	ATTENTION
A fan manufactured with an explosion resistant motor does not certify the entire unit to be explosion resistant. Refer to UL Listing Mark for the fans approved usage.	La présence d'un moteur antidéflagrant sur un ventilateur ne garantit pas que tout l'appareil est antidéflagrant. Pour connaître les emplois autorisés de l'appareil, voir son marquage de conformité UL.

Direct Drive Centrifugal Inline Exhaust Fan

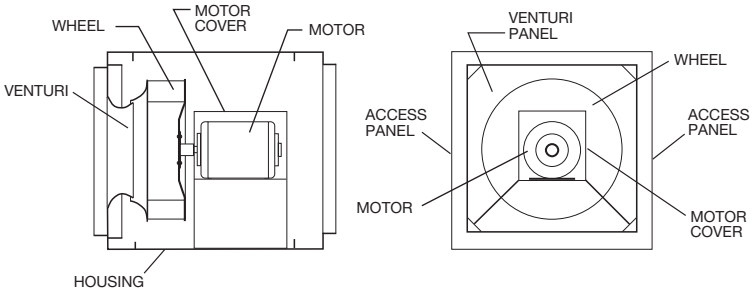

Belt Drive Centrifugal Inline Exhaust Fan

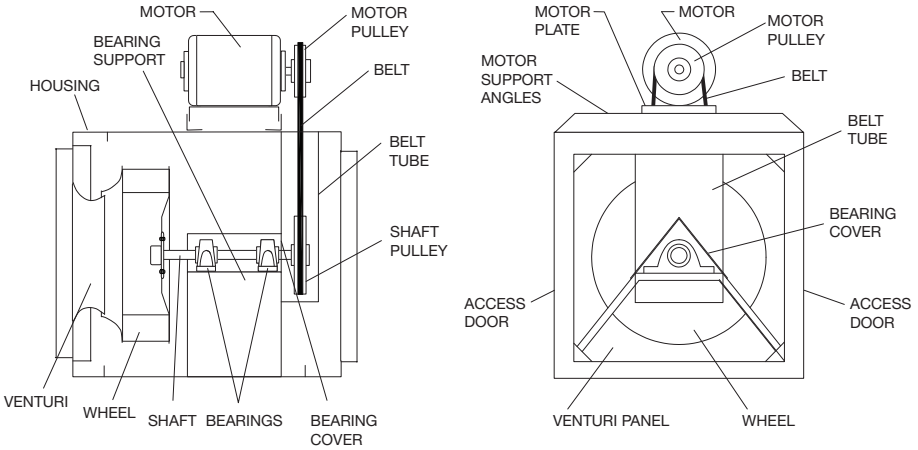

Our Commitment

As a result of our commitment to continuous improvement, Greenheck reserves the right to change specifications without notice.

Product warranties can be found online at Greenheck.com, either on the specific product page or in the literature section of the website at Greenheck.com/Resources/Library/Literature.

Greenheck's Centrifugal Inline Fans catalog provides additional information describing the equipment, fan performance, available accessories, and specification data.

AMCA Publication 410-96, Safety Practices for Users and Installers of Industrial and Commercial Fans, provides additional safety information. This publication can be obtained from AMCA International, Inc. at www.amca.org.

GREENHECK®
Building Value in Air.

Phone: 715.359.6171 • Fax: 715.355.2399 • Parts: 800.355.5354 • E-mail: gfcinfo@greenheck.com • Website: www.greenheck.com

Copyright 2026 © Greenheck Fan Corporation